全封闭活塞式制冷压缩机
技术规格书
HERMETIC REFRIGERATION
COMPRESSOR SPECIFICATIONS

适用于空调器及商用制冷机

APPROVED FOR

AIR CONDITIONERS & COMMERCIAL REFRIGERATORS

型号 **MODELS：**

QL52　　QL62　　QL3-52　　QL3-74

QL3-112　QL3-134

中 外 合 资 浙 江 兴 发 制 冷 设 备 有 限 公 司
ZHE JIANG XINGFA REFRIGERATION EQUIPMENT CO.,LTD

目录

1．注意事项

APPLICATION INSTRUCTIONS

2．技术参数

SPECIFICATIONS

3．使用范围

OPERATING CONDITIONS

4．一般特性

CHARACTERISTICS

5．外形尺寸及安装电气接线图

EXTERNAL VIEW & DIMENSIONS、MOUNT ASSEMBLY & WIRING DIAGRAM

6．产品装箱清单

RARTS LIST

7．产品的包装、运输和贮存

PACKING，TRANSPORTATION AND STORAGE

8．附表

TABLES

1. 注意事项　　APPLICATION INSTRUCTIONS

1.1　压缩机出厂前已注入适量的冷冻机油，使用中不应随意添加和倒出，也不应随意加入其他牌号的冷冻机油，否则会损坏压缩机
Oil has been charged in the compressor. DO not add or subtract randomly. SUNISO 3GS is only been used.

1.2　压缩机对残余水分含量要求较高，故在将压缩机接入制冷系统前方可拔去各管口橡胶塞，并应在 10 分钟内完成焊接（装配），以免水分进入压缩机而对整个制冷系统造成危害。
Don’t open the compressor plugs more than 10 minutes before use to prevent moisture from getting into the compressor.

1.3　运行中的压缩机电机是有制冷介质 R22 冷却的，在缺少制冷介质的情况下不得运行压缩机。
The compressor’s motor is cooled by refrigerant R22,don’t operate compressor without refrigerant R22.

1.4　压缩机内部处于真空状态时严禁运行压缩机，否则内部的弧形电流将损坏内部零件。
The compressor should not be operated while under vacuum; otherwise, internal arcing can cause damaging parts.

1.5　压缩机运行停机后再次启动应间隔 3 分钟以上。
Three minutes shut-off time should be ensured at least until restarting.

1.6　压缩机应于水平地面保持垂直，最大安装倾斜角不大与 5°。
The allowable incline should be lese them 5 degree from vertical during operation.

1.7　制冷剂填充量应不大于 2.5 倍润滑油重量。
Max weight of refrigerant charge should be less than oil weight multiplied by 2.5.

1.8　制冷剂应从制冷系统的冷凝器的尾端注入，而不能直接注入压缩机。
Refrigerant should be charged from the end of condenser of refrigerating systems, never charge refrigerant to the compressor directly.

1.9　对于中温工况应用情况，压缩机前一般应配置适当体积的气液分离器，压缩机回气温度应保证不少于 2.8℃（5℉）的过热度，以防液击的发生。
A suction accumulator is normally required for the compressor being used on medium backpressure condition. The return gas temperature must maintain 2.8℃（5℉）superheat above to prevent excessive liquid from entering compressor.

1.10 压缩机启动前应仔细检查接线是否正确，并注意引出线不得与压缩机表面接触。
Before starting the compressor, check the wiring. And the lead wires should not be touched on the surface of the compressor.

2.技术参数 SPECIFICATIONS

ZINGFA R404a(LBP)TEHCNICAL DATA						
MODEL	QL 52	QL 62	QL3-52	QL3-74	QL3-112	QL3-134
Nominal Capacity(W)名义制冷量	2069	2708	2069	3156	4350	5520
COP 能效比	1.5	1.5	1.5	1.5	1.5	1.5
Noise(SPL)dB(A)噪音分贝	≤64	≤65	≤64	≤65	≤66	≤66
Displacement cc/rev 排气量	52	62.7	52	74	112.5	134.8
Motor Input 输入功率	1380	1800	1380	2060	2830	3620
RLA(A)额定电流	6.8	11.1	2.5	3.2	5	6.3
LRA(A)堵转电流	63	74	28	36	68	68
Insulation Level 绝缘等级	F	F	F	F	F	F
Revolutions rev/min 转速	≥2860	≥2860	≥2860	≥2860	≥2860	≥2860
Power Source 电源	220V/50Hz	220V/50Hz	380V/50Hz	380V/50Hz	380V/50Hz	380V/50Hz
Lin to line Resistance Ω (25) 绕组电阻			6.8	3.3	2.2	2
Refrigerator Oil Charge cc冷冻机油注入量	1500	1500	1500	1500	2000	2000
Net Weight(Lubricating Oil Included 净重	33	34	31	33	48	48
Start Resistance Winding 启动绕组电阻	3.92	2.68				
Run Winding Resistance 运行绕组电阻	1.14	0.68				
Start Capacity 启动电容	156-186uF/330V					
Run Capacity 运行电容	35uF/330V					

3.使用范围　OPERATING CONDITIONS

3.1 应用界限 The Range For Usage

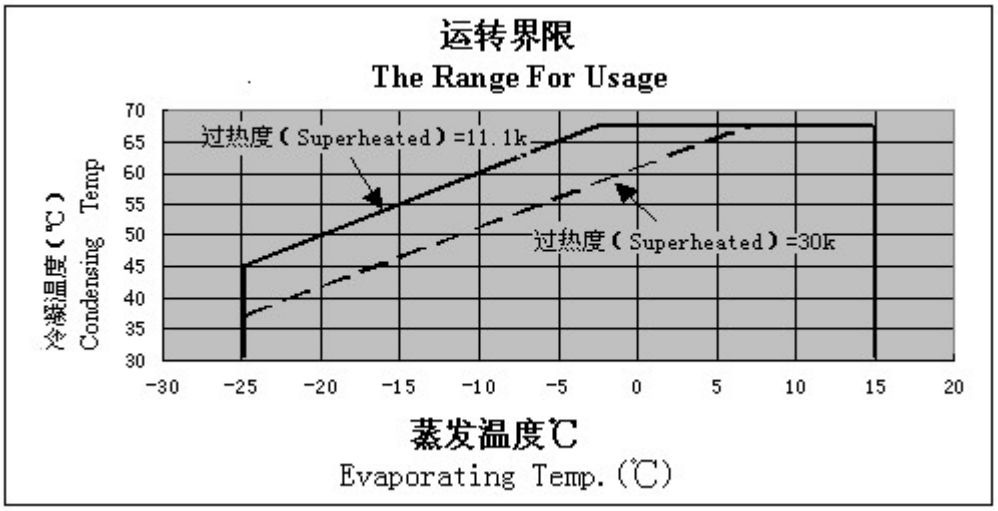

3.2 排气温度 Discharge Temperature: ≤150℃

3.3 电动机绕组温度 Motor Wiring Temperature: ≤130℃

3.4 电压范围 Voltage Range:198～264V/3Φ/50Hz , 187～253V/3Φ/60Hz

3.5 压缩机压缩比　Compressor Compression Ratio

根据每种压缩机的性能参数表，在边界条件工况下，压缩机仅能短时间运行，不得连续运行，以免损坏压缩机。

Refer to individual performance table envelope. Do not run continuously at boundaries, run only for a short period of time at boundary conditions.

4.一般特性　　CHARACTERISTICS

4.1 压缩机表面采用黑色或蓝色烤漆，光洁、色泽一致，漆层附着牢固。
Painting: Black or Blue paint, Baked Smoothly & Firmly.

4.2 压缩机外壳在 2.0MPa 压力条件下历时 1 分钟，不允许有泄漏。
The shell of compressor shall withstand the pressure of 2.0MPa for one minute , any leakage can’t occur.

4.3 对地绝缘电阻不小于 200MΩ
Insulation resistance (terminal to earth) should be more than 200MΩ.

4.4 压缩机（冷态）应能承受接线柱对壳体之间施加 1250V，历时 1min 的耐压试验，电流设定为 5mA。
The compressor shall withstand high potential test (1250V/1min,between terminal to earth ,current limit is 5 milliamps total)

4.5　压缩机内部残余水分含量不大于 300mg，残余杂质含量不大于 200mg。
Residual moisture should be less than 300mg , residual impurities should be less than 200mg.

4.6 压缩机保护装置采用进口内置式保护器和安全阀，可有效防止由于冷媒泄漏、风扇堵转等引起的对压缩机的损坏。
Compressor internal protectors include motor protector and pressure relief valve, which can effectively prevent the damage to compressor, caused by leakage of refrigerant and blocked fan condition.

4.7　压缩机采用曲轴箱加热器（根据用户需要）。
According to purchaser’s demand, crankcase heater may be supplied.

5.外形尺寸及安装电气接线图
EXTERNAL VIEW & DIMENSIONS、MOUNT ASSEMBLY & WIRING DIAGRAM

5.1 外形尺寸 External View Dimensions

5.2安装图 Mount Diagram

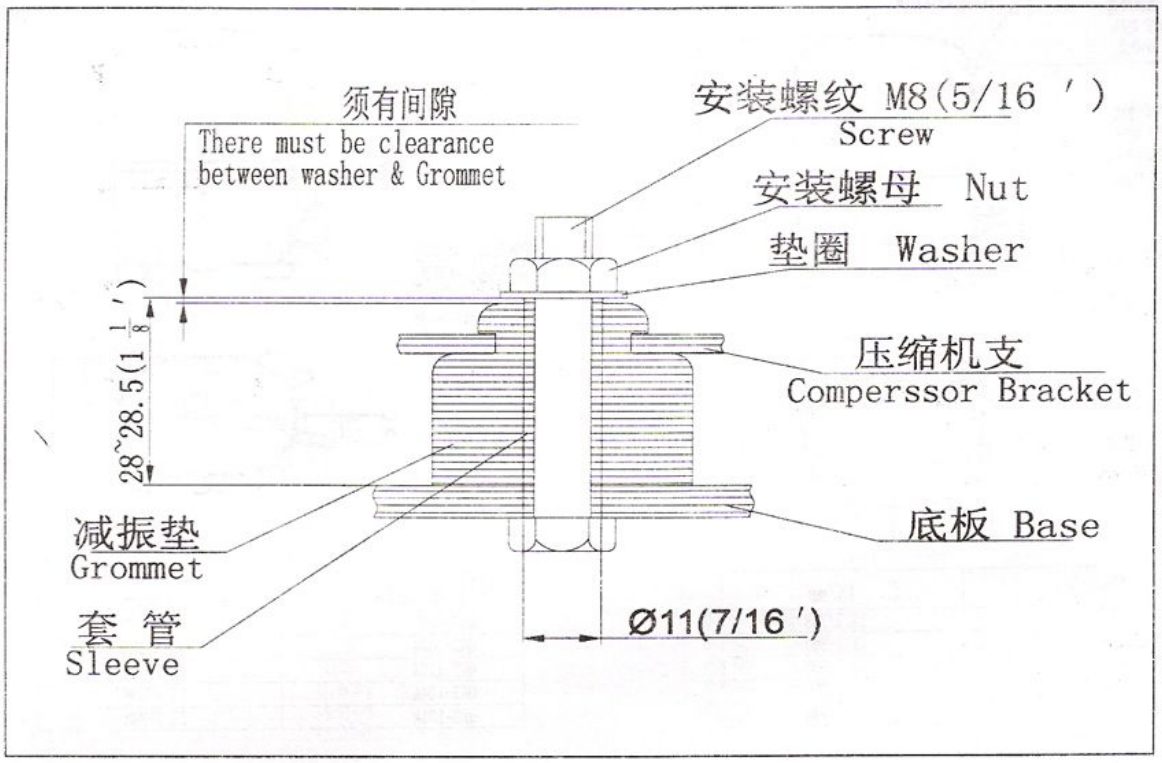

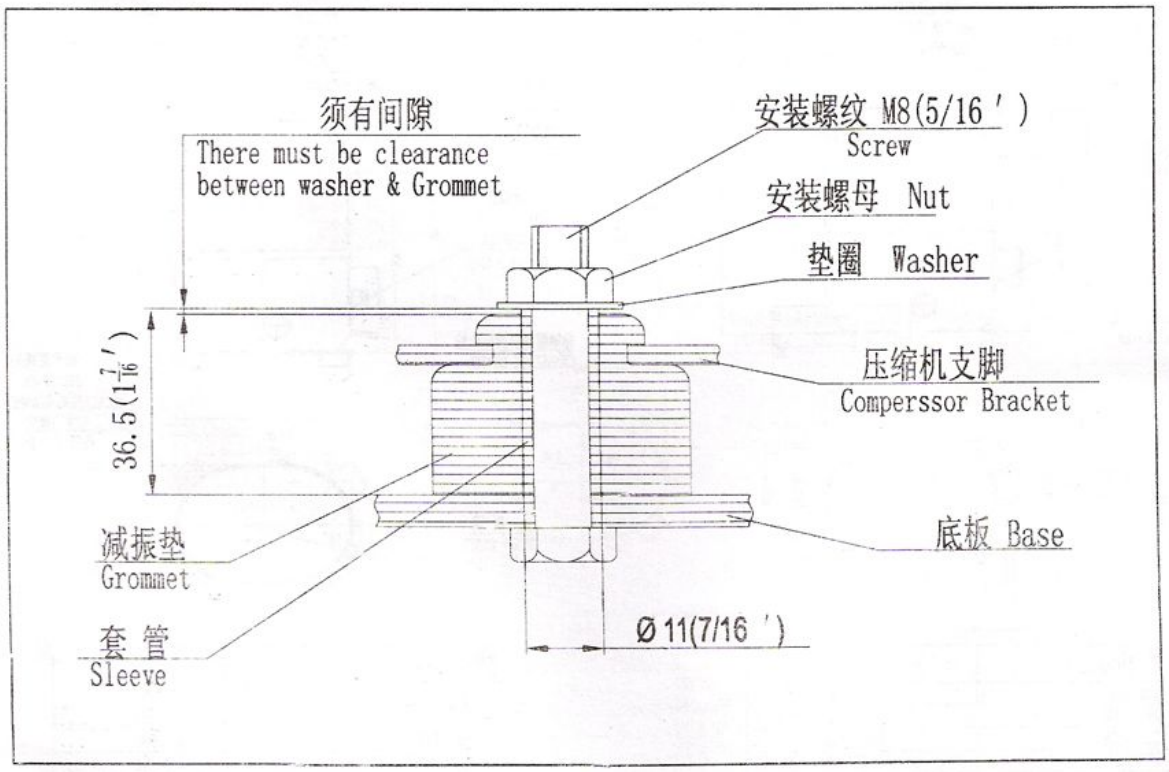

5.3 电气接线图 Wiring Diagram

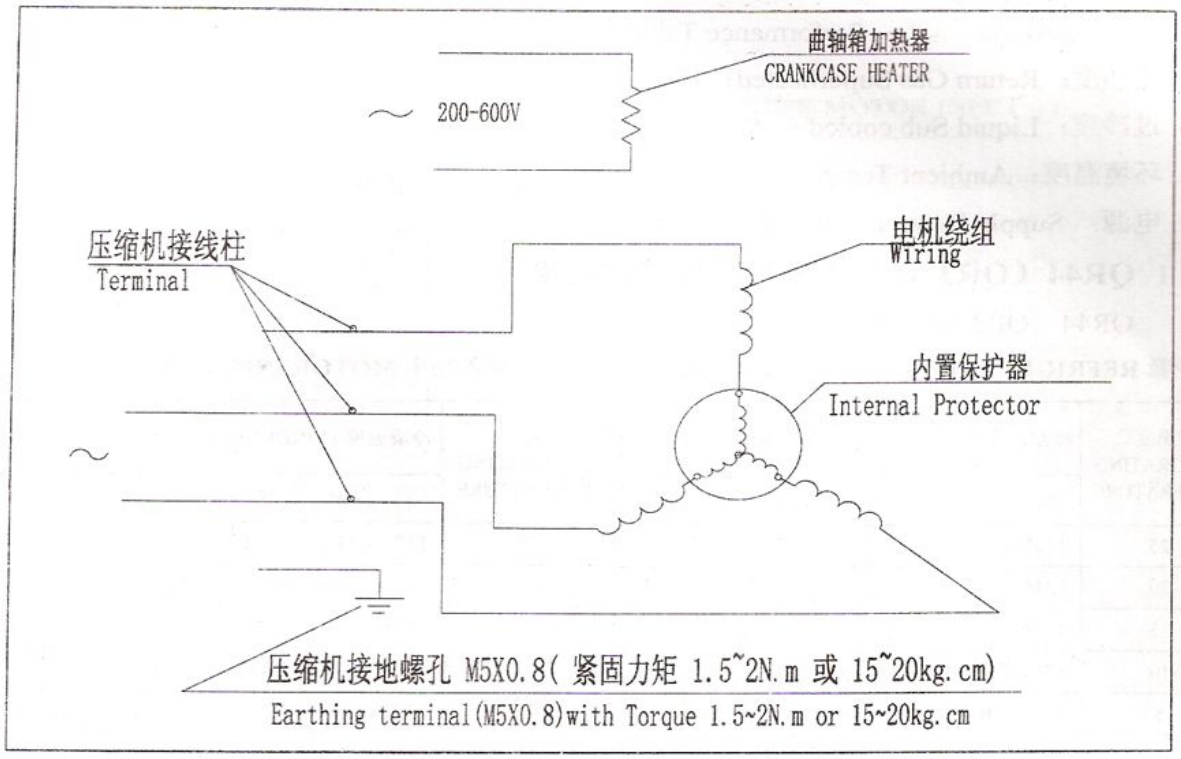

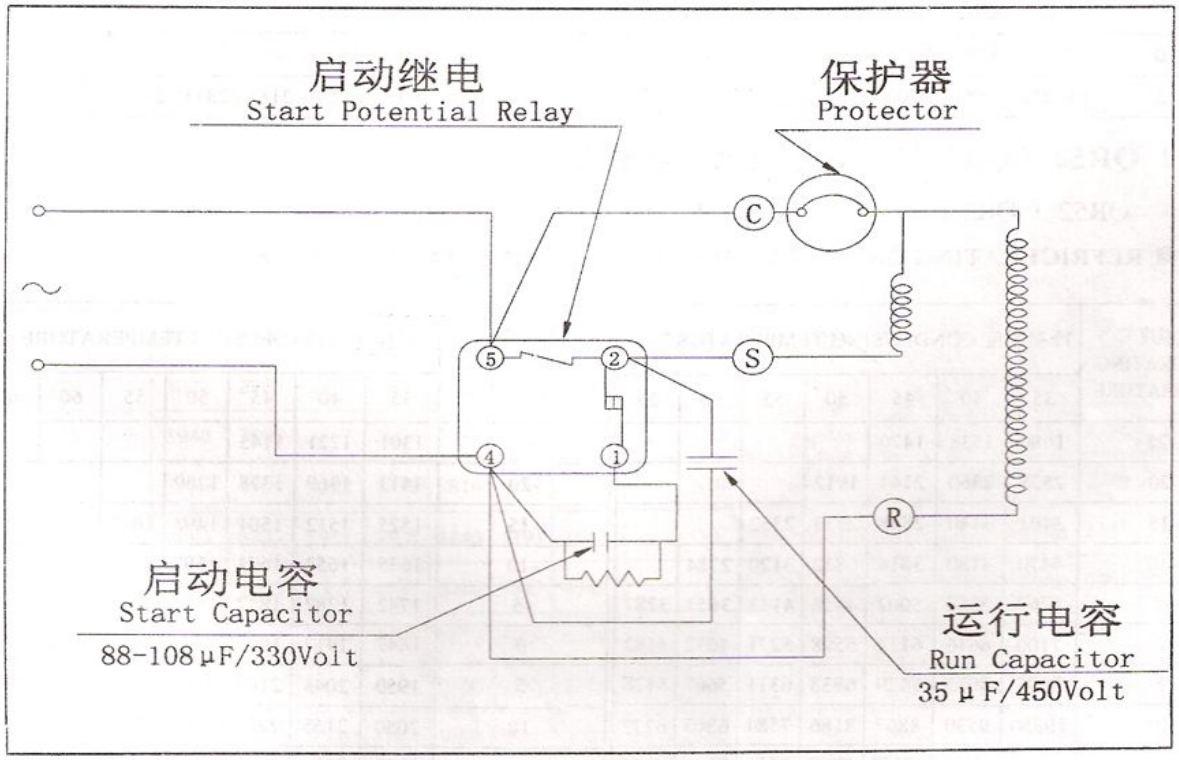

6.产品装箱清单 PARTS LIST

序号 Serial number	名称 Name	数量 Quantity	备注 Notes
1	压缩机 Compressor	1	
2	减震垫 Grommet	4	
3	减震套管 Sleeve	4	
4	产品合格证 Qualification	1	
5	技术规格书 Specification	1	根据需要配给 Needed

7.产品的包装、运输和贮存 PACKING，TRANSPORTATION AND STORAGE

7.1 压缩机包装应能避免运输中受潮和损伤，包装箱上的文字标记清晰整齐。
The packing should be moisture-resistant, and prevent the compressor in it being damaged. The letters and marks on the package should be clearly painted.

7.2 压缩机运输和搬运过程中，应保持平稳、轻放、倾斜角不得大于 45°。
Don’t incline the compressor more than 45°.

7.3 压缩机应储存在室温、无腐蚀性气体存在的环境中。
The compressor should be kept in the place with normal room temperature, and should be kept out of corrosive atmosphere.

8. 附表一 TABLES

8.1 单位换算表 UNITS CONVERSION CHART

单位换算表 UNITS CONVERSION CHART
1KCAL/H=1.163WATTS 1BTU/H=0.293WATTS t℉=9/5×θ℃+32 1INCHE(IN)=25.4MILLIMETERS(mm)